THIS DOCUMENT IS TRUE AND CORRECT AT TIME OF PUBLICATION. CONTINUED PRODUCT IMPROVEMENTS MAKE SPECIFICATIONS AND MEASUREMENTS SUBJECT TO CHANGE WITHOUT NOTICE.

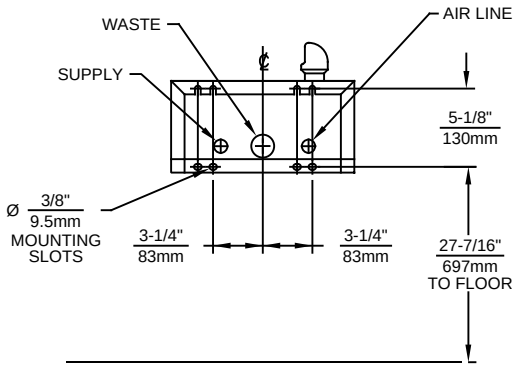

MOUNTING DETAIL
BACK VIEW

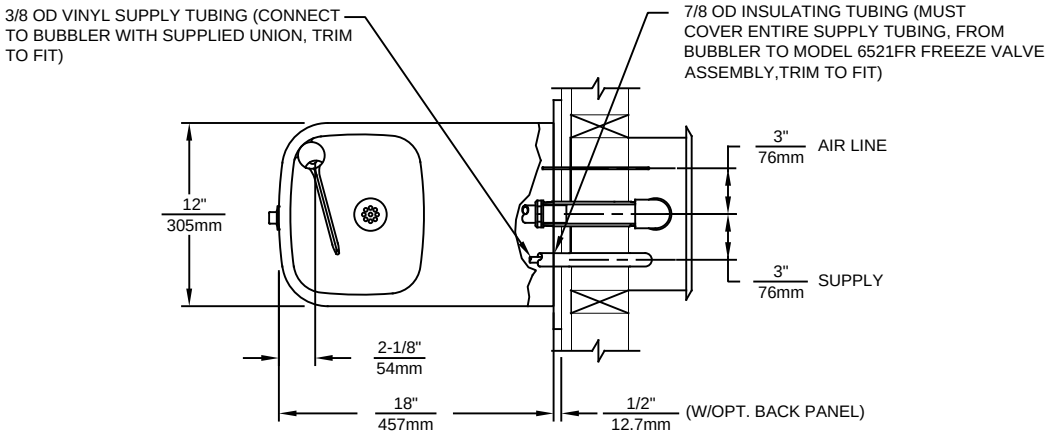

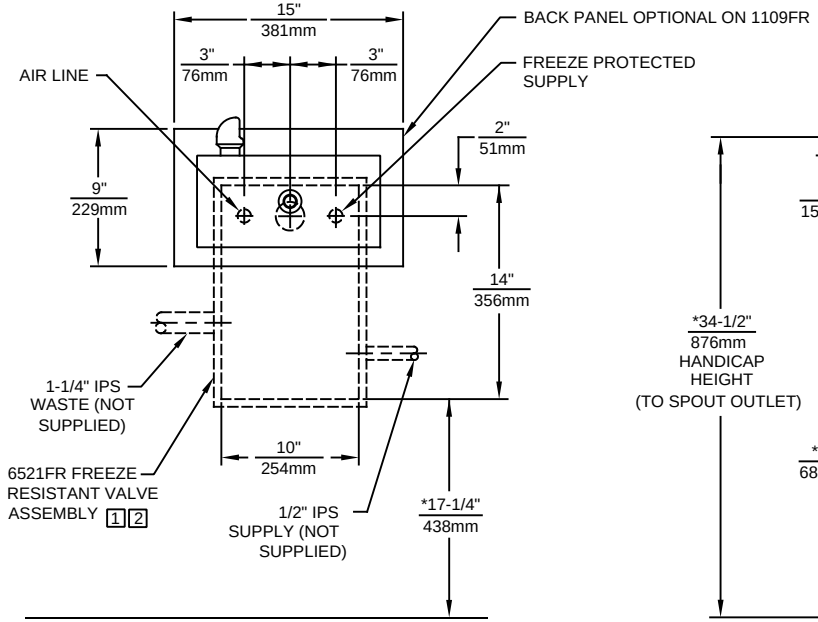

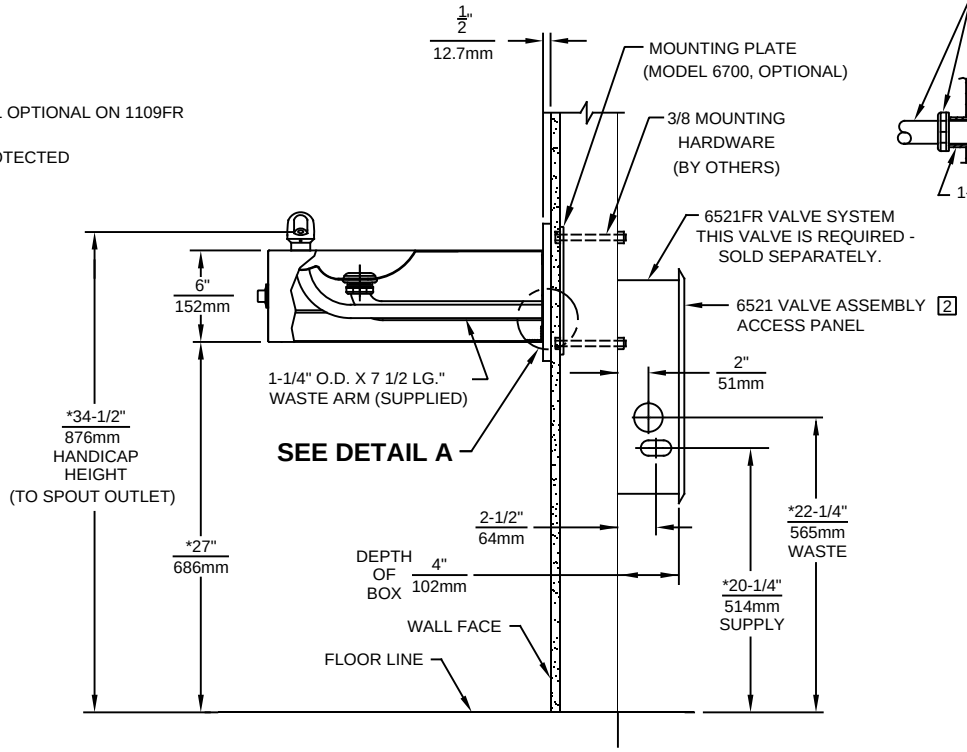

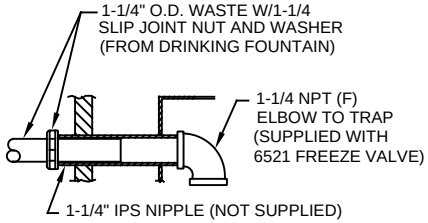

DETAIL A

NOTES:

1. THIS FOUNTAIN REQUIRES THE USE OF MODEL 6521FR FREEZE RESISTANT VALVE ASSEMBLY (SOLD SEPARATELY)
2. VALVE ASSEMBLY MUST BE INSTALLED IN A WARM AREA. PROVISIONS SHOULD BE MADE TO ALLOW ACCESS TO ACCESS PANEL
3. HOLD ROUGH-IN DIMENSIONS ± 1/4" (6.4mm).
4. * WHEN INSTALLING THIS UNIT LOCAL, STATE OR FEDERAL CODES SHOULD BE ADHERED TO. FOR INSTALLATION HEIGHTS OTHER THAN SHOWN, DIMENSIONS MARKED (*) MUST BE ADJUSTED ACCORDINGLY.

Haws®
1455 KLEPPE LANE
SPARKS, NEVADA 89431
(775) 359-4712 FAX (775) 359-7424
E-MAIL: HAWS@HAWSCO.COM
WEBSITE: WWW.HAWSCO.COM

ECN NO.	REVISED PER ECN: 5527	BY: FV	MODEL(S) 1109FR	PART NUMBER 0002076626.D
DRAWN: F.V.	DATE: 06-01-98	CHK'D.: DP		REVISION 15
APPROVED: FV	DATE: 04/02/20		SCALE: 1:16	DRAWING TYPE: INSTALLATION	SIZE: A	SHEET 1 OF 1

©2020 Haws Corporation - All Rights Reserved. HAWS® and other trademarks used in these materials are the exclusive property of Haws Corporation.